ISO CLAD
The panel of choice

Firestop

Fire-rated wall and ceiling panels

Firestop 10
Firestop 12

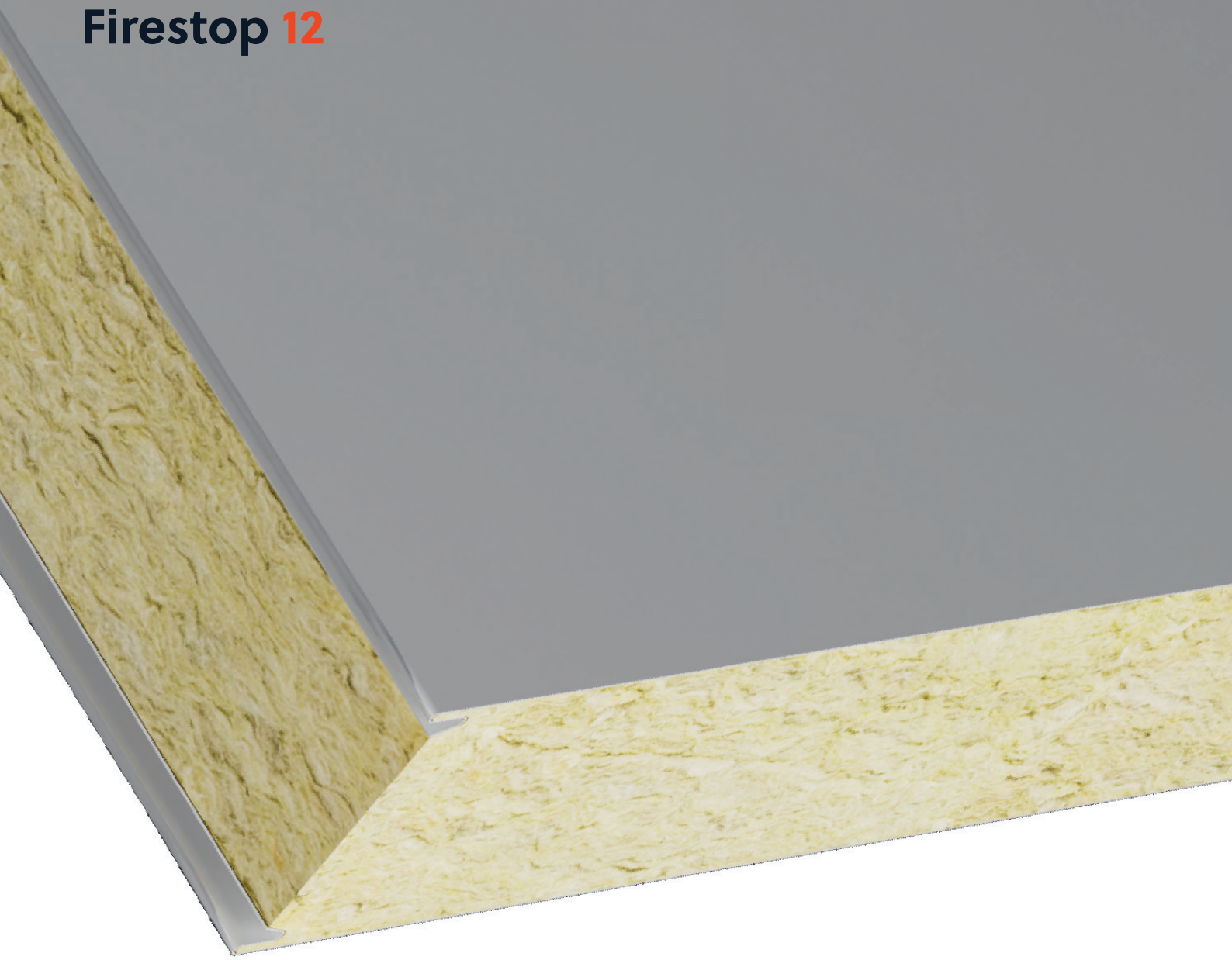

Table of Contents

Structural Performance	1
Firestop 10	2
Firestop 10 | Fire Ratings & Spans	3
Firestop 12	4
Firestop 12 | Fire Ratings & Spans	5
Firestop Ceilings	6
Firestop Span Performance	7
Panel Facings | SSAB	8
Panel Facings | TATA Steel	9
Panel Profiles	10
Flashings and Trims	11
CustomClad	12-13
System Details	14-18

Structural Performance

Strength and efficiency built in

Firestop panels are built to deliver dependable strength and stability across a range of spans, while making installation quicker and easier. Suitable for both new build and retrofit projects, they offer a more efficient alternative to traditional construction without compromising performance or quality.

Built on tested performance

Firestop 10 and 12 panels are manufactured to EN 14509:2013 and deliver dependable structural performance across a range of panel thicknesses. Every production batch is carefully tested and quality checked to maintain consistent standards throughout the manufacturing process. This approach ensures every panel delivered meets the high levels of quality, safety and structural integrity your project depends on.

Support when you need it

When performance matters, Firestop panels help you keep your project moving. Our team is on hand with clear advice, technical support and practical guidance, so you can feel confident you are choosing the right solution from day one.

Firestop 10

Firestop 10 is a reliable non-combustible wall panel used in industrial, retail and infrastructure projects, combining trusted protection with quick, easy installation.

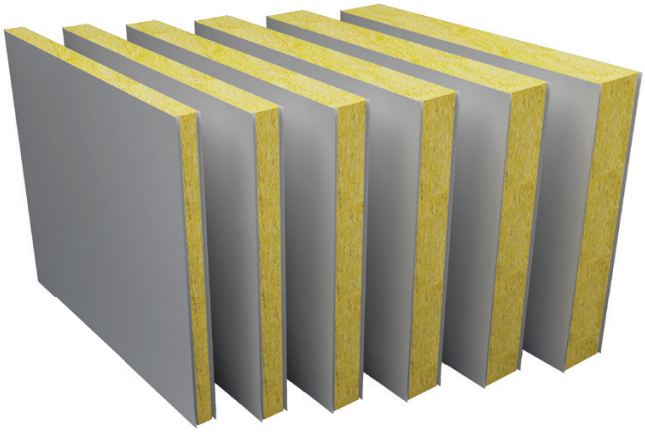

100-200mm thickness
1190mm standard width

Euroclass A2-s1, d0 (1)

Custom **colours, facings & profiles**

3-7 day lead time (2)

Firestop 10 technical performance

Panel thickness	Test results					
	U-value as per EN 14509	R-value as per EN 14509	Weight (3)	Sound reduction	U-value (4)	R-value (4)
	$Wm^{-2}K^{-1}$	m^2KW^{-1}	kg/m^2	dB	$Wm^{-2}K^{-1}$	m^2KW^{-1}
100mm	0.440	2.258	19.090	31	0.390	2.560
125mm	0.350	2.831	21.840	32	0.310	3.230
150mm	0.290	3.406	24.590	32	0.270	3.850
175mm(5)	-	-	27.340	33	0.220	4.550
200mm	0.220	4.550	30.090	34	0.190	5.260

(1) With specific steel skins.

(2) Lead times are dependent on order quantity and selected steel type.

(3) Panel weights based on 0.5mm gauge steel to both faces.

(4) We have published two sets of U-Values and R-Values. As per BS EN 14509 we have tested our full panels, including their joints. U-Value(4) and R-Value (4)considers a section in the centre of a single panel only.

(5) NPD

Product tolerances as per EN 14509 (6)					
Length (L)	Cover width (W)	Thickness (D)	Squareness	Flatness	Joint gap
L ≤ 3m ± 5mm	± 2mm	D ≤ 100m ± 2mm	0.006 x nominal cover width	1.5mm from the theoretical flat plane over 700mm	+3mm / -0mm
L ≥ 3m - ± 10mm		D ≥ 100m ± 2%			

(6) Product is produced strictly to EN 14509:2013 manufacturing tolerances.

Firestop 10 | Fire Ratings & Spans

Fire ratings and maximum recommended spans

Thickness	Orientation	Integrity	Insulation	Grade	Max span	LPCB ref. No.
100mm	H	60	30	FR30	7.5m	142a/01
100mm	H	60	60	FR60	6m	142a/01
100mm	H	180	30	FR30	7.5m	142a/01
100mm	H	180	60	FR60	6m	142a/01
125mm	H	60	30	FR30	7.5m	142a/01
125mm	H	60	60	FR60	6m	142a/01
125mm	H	180	30	FR30	7.5m	142a/01
125mm	H	180	60	FR60	6m	142a/01
150mm	H	60	30	FR30	7.5m	142a/01
150mm	H	60	60	FR60	6m	142a/01
150mm	H	180	30	FR30	7.5m	142a/01
150mm	H	180	60	FR60	6m	142a/01
175mm	H	60	30	FR30	7.5m	142a/01
175mm	H	60	60	FR60	6m	142a/01
175mm	H	180	30	FR30	7.5m	142a/01
175mm	H	180	60	FR60	6m	142a/01
200mm	H	60	30	FR30	7.5m	142a/01
200mm	H	60	60	FR60	6m	142a/01
200mm	H	180	30	FR30	7.5m	142a/01
200mm	H	180	60	FR60	6m	142a/01

- Wall panel orientation, Horizontal or Vertical (H/V), relates to the long joint orientation.
- When referring to LPCB reference numbers, please consult the Technical Department or visit redbooklive.com for full installation details.

Firestop 12

Firestop 12 is a high-performance fire-rated panel for demanding wall applications across industrial, commercial and specialist projects, offering enhanced strength and up to 120 minutes of certified protection.

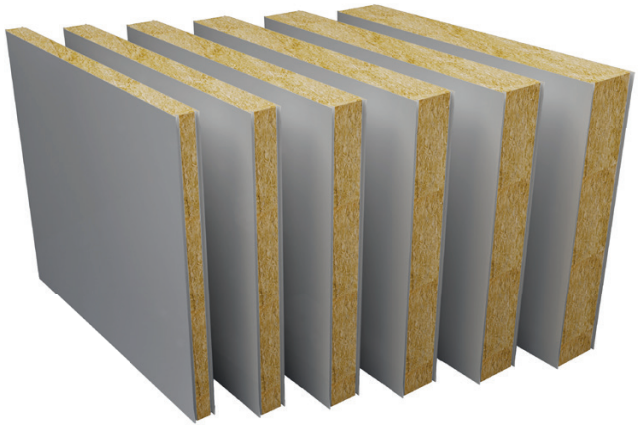

100-200mm thickness
1190mm standard width

Euroclass A2-s1, d0 (1)

Custom **colours, facings & profiles**

3-7 day lead time (2)

Firestop 12 technical performance

Panel thickness	Test results					
	U-value as per EN 14509	R-value as per EN 14509	Weight (3)	Sound reduction	U-value (4)	R-value (4)
	$Wm^{-2}K^{-1}$	m^2KW^{-1}	kg/m^2	dB	$Wm^{-2}K^{-1}$	m^2KW^{-1}
100mm	0.470	2.114	21.590	31	0.400	2.500
125mm	0.380	2.651	24.965	32	0.330	3.030
150mm	0.310	3.190	28.340	32	0.270	3.700
175mm	0.270	3.721	31.715	33	0.230	4.350
200mm	0.230	4.261	35.090	34	0.200	5.000

(1) With specific steel skins.

(2) Lead times are dependent on order quantity and selected steel type.

(3) Panel weights based on 0.5mm gauge steel to both faces.

(4) We have published two sets of U-Values and R-Values. As per BS EN 14509 we have tested our full panels, including their joints. U-Value(4) and R-Value(4) considers a section in the centre of a single panel only.

Product tolerances as per EN 14509 (5)					
Length (L)	Cover width (W)	Thickness (D)	Squareness	Flatness	Joint gap
L ≤ 3m ± 5mm	± 2mm	D ≤ 100m ± 2mm	0.006 x nominal cover width	1.5mm from the theoretical flat plane over 700mm	+3mm / -0mm
L ≥ 3m - ± 10mm		D ≥ 100m ± 2%			

(5) Product is produced strictly to EN 14509:2013 manufacturing tolerances.

Firestop 12 | Fire ratings & spans

Fire ratings and maximum recommended spans

Thickness	Orientation	Integrity	Insulation	Grade	Max span	LPCB ref. No.
100mm	H	60	60	FR60	4m	142a/02
100mm	V	60	60	FR60	4m	142a/02
125mm	H	60	60	FR60	4m	142a/02
125mm	V	60	60	FR60	4m	142a/02
150mm	V	120	120	FR120	4m	142a/02
150mm	H	30	30	FR30	6m	142a/02
150mm	H	60	60	FR60	6m	142a/02
150mm	H	90	90	FR90	6m	142a/02
150mm	H	120	120	FR120	6m	142a/02
175mm	H	30	30	FR30	6m	142a/02
175mm	H	60	60	FR60	6m	142a/02
175mm	H	90	90	FR90	6m	142a/02
175mm	H	120	120	FR120	6m	142a/02
200mm	H	30	30	FR30	6m	142a/02
200mm	H	60	60	FR60	6m	142a/02
200mm	H	90	90	FR90	6m	142a/02
200mm	H	120	120	FR120	6m	142a/02

- Wall panel orientation, Horizontal or Vertical (H/V), relates to the long joint orientation.
- When referring to LPCB reference numbers, please consult the Technical Department or visit redbooklive.com for full installation details.

Firestop Ceilings

Firestop 12 ceiling panels provide certified fire protection and strength where overhead safety is essential. Made with a high-density mineral wool core and steel facings, they deliver reliable performance and a clean, durable finish.

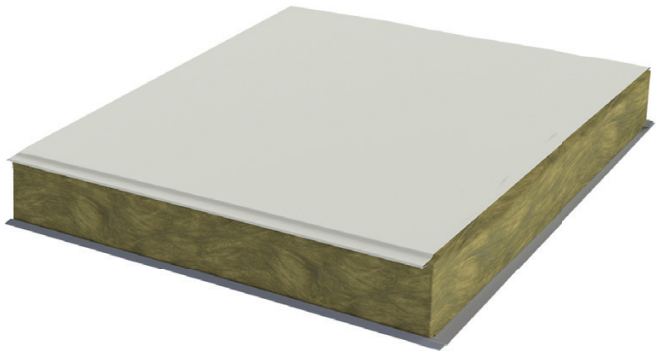

100-150mm thickness
1190mm standard width

Euroclass A2-s1, d0 (1)

Custom **colours, facings & profiles**

3-7 day lead time (2)

Ceiling fire ratings and maximum recommended spans

Thickness	Orientation	Integrity	Insulation	Grade	Max span	LPCB ref. No.
100mm	C	60	60	FR60	5.5m	142a/08
150mm	C	30	30	FR30	8.0m	142a/08
150mm	C	60	60	FR60	5.2m	142a/08
150mm	C	90	90	FR90	4.5m	142a/08
150mm	C	120	120	FR120	4.5m	142a/08

(1) With specific steel skins.
(2) Lead times are dependent on order quantity and selected steel type.
Ceiling panel orientation, Ceiling (C), relates to the long joint orientation.
When referring to LPCB reference numbers, please consult the Technical Department or visit redbooklive.com for full installation details.

Firestop Span Performance

Our Firestop wall and ceiling panels are carefully designed to offer great structural integrity and performance with fire-rated spans of up to 7.5m (to LPS 1208 and EN 1364).

Firestop maximum structural spans

	Panel thickness					
Panel type	**75mm**	**100mm**	**125mm**	**150mm**	**175mm**	**200mm**
Firestop 10	-	6.9m	7.9m	8.8m	9.3m	9.5m
Firestop 12	-	9.3m	10.2m	11.0m	11.7m	12.5m
Firestop 12 ceilings	-	6.0m	7.0m	7.5m	7.9m	8.2m

Please refer to the fire ratings & spans tables above to ensure your span is suitable for your fire protection requirements.

Design for a colourful future

GreenCoat® from SSAB

Steel plays a vital role in the built environment, and SSAB is a global leader in premium steel solutions. The company is driving innovation across the industry, developing steels with near-zero fossil CO_2 emissions to support a more sustainable future.

GreenCoat is SSAB's range of colour-coated steel products developed specifically for the construction market. Widely used in architectural applications, GreenCoat offers a broad choice of colours and coatings designed for durability and long-term performance. A key feature of the range is the use of Swedish rapeseed oil within the paint system, replacing traditional fossil-based oils to reduce environmental impact.

SSAB Zero™ is the world's first commercial steel made from 100 percent recycled steel, produced using fossil-free electricity, biocarbon and biogas. Paired with the GreenCoat paint system, it reduces carbon impact while maintaining the performance and durability required for construction, supporting ESG objectives and lower Scope 3 emissions.

- GreenCoat® uses Swedish rapeseed oil for a lower environmental impact.
- SSAB Zero™ is made from 100% recycled steel using fossil-free energy.
- Both finishes provide outstanding resistance to UV, corrosion and wear.
- GreenCoat® and SSAB Zero™ support ESG goals and low-carbon procurement.

GREENCOAT®
COLORFUL STEEL

TATA STEEL

Colorcoat® pre-finished steel

Durable and guaranteed performance

For 60 years Tata Steel has developed a range of technically leading Colorcoat® pre-finished steel products which have been comprehensively tested and manufactured to the highest quality standards.

The Colorcoat® portfolio, including Colorcoat Ultra®, Colorcoat® and Advantica® L Control, are designed to perform in demanding environments. These advanced pre-finished steel products provide longevity and durability over the life of the building.

All Colorcoat® products are certified to BES 6001 Responsible Sourcing standard.

Both Colorcoat Prisma® and Colorcoat HPS200 Ultra® have published Environmental Product Declarations (EPDs) that comply with EN 15804 and ISO 14025. For more information, please see dedicated Colorcoat® product literature.

Proven pre-finished steel technology trusted worldwide.

Designed to resist corrosion and UV.

Responsibly sourced under BES 6001 accreditation.

Backed by long-term performance guarantees for peace of mind.

Colorcoat is a registered trademark of TATA Steel UK.

Panel Profiles

Each Firestop panel profile is engineered for precision, strength and consistent performance. Choose the design that best fits your application and finish requirements.

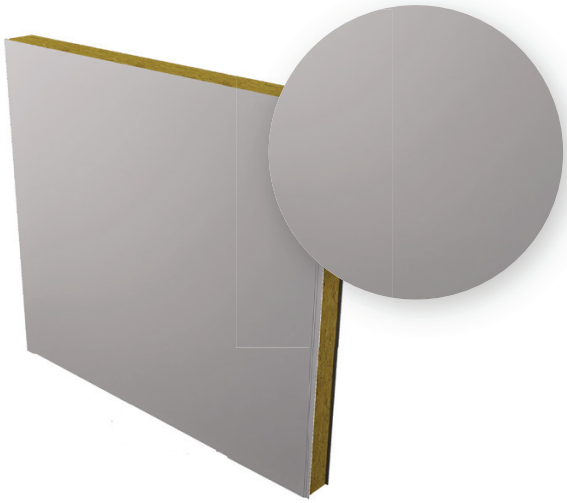

Flat profile

V-rib profile

Pitch 200mm - 5 per panel
Nominally 1mm deep

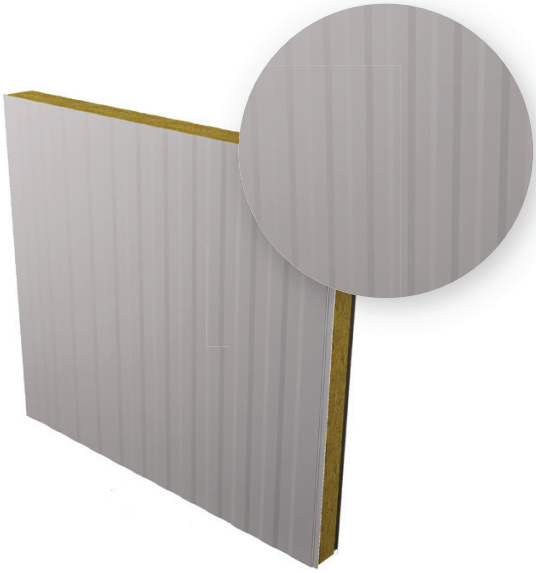

Castellation profile

Pitch 100mm
Nominally 1mm deep

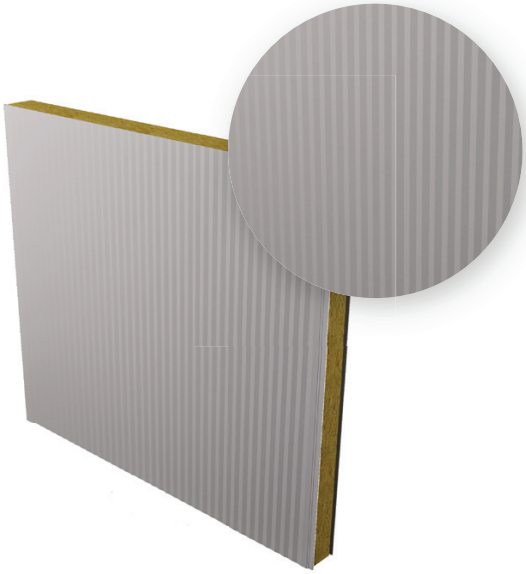

Micro-rib profile

Pitch 30mm - 1 side only
Nominally 1mm deep

Flashings and Trims

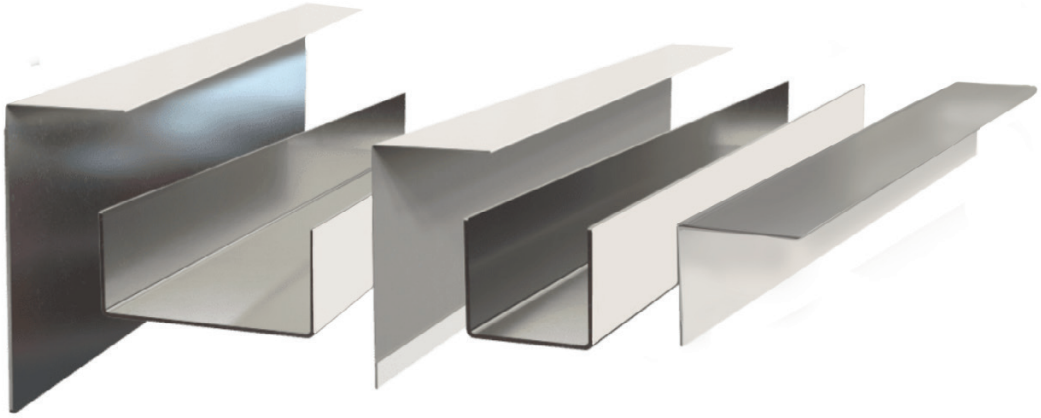

Finishing every detail

To get the best performance from Firestop panels every junction needs to be finished with precision made flashings. That's why we provide a full range of flashings and trims designed to integrate seamlessly with Firestop walls and ceilings. Produced from high-quality steel, our flashings can be made to custom shapes and profiles, with options for powder coating or colour matching.

Types of flashings

Internal angle – neat finish for inside corners

External angle – clean protection for outside corners

Internal channel – closes junctions at panel junctions

Offset channel – stepped profile for alignment

Z shape flashing – versatile profile for returns and junctions

Top hat flashing – rigid cover for joints and cappings

Galvanised angles – durable concealed reinforcement

Cover strip – seals vertical or horizontal joints

Bespoke flashings – custom profiles to your requirements

CustomClad

Built around your project

Every project comes with its own challenges. CustomClad is designed to remove them.

CustomClad helps reduce time on site by preparing panels around your project before they arrive. From apertures and doorways to flashings and finishing details, every element is planned to support a cleaner, more efficient installation.

Made to match your project

Doorways, side cuts and apertures all available through CustomClad.

Precision finishing, made to fit

Flashings fitted around apertures and doorways with mitred or notched finishes, manufactured with flexibility to suit your project.

Delivered ready to install

Panels palletised in install order, fully labelled and protected with Corex to support your project.

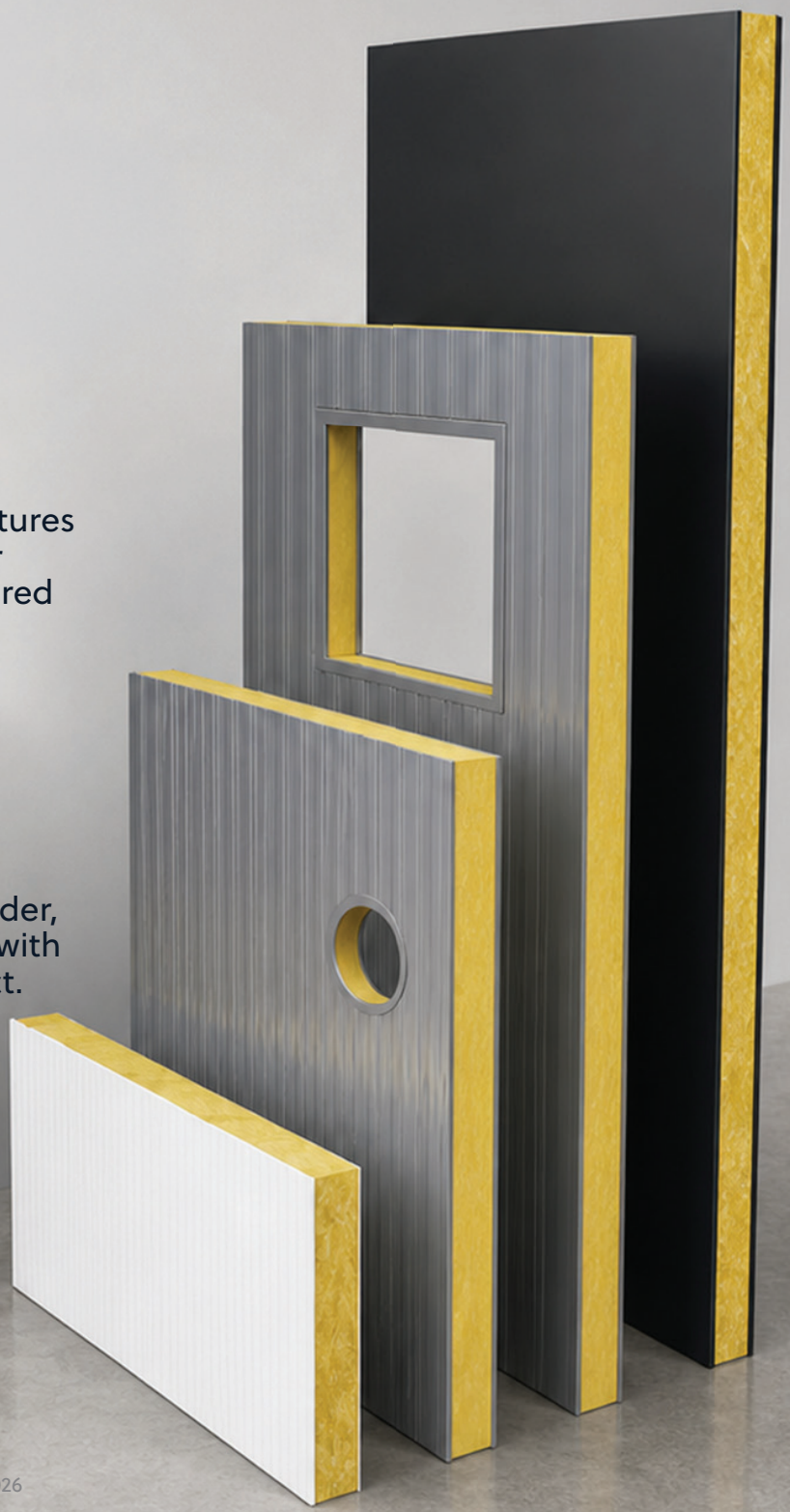

What we can do

Whether you need simple cut panels or a fully bespoke layout with multiple apertures and details, we work with you to make sure everything is ready before it reaches site.

Panel lengths
From 150mm up to 13,500mm

Apertures
From 70mm x 70mm and upwards

Side cuts
From 50mm and above, with or without the joint

Doorways
Cut to your required size, with a minimum 50mm retained around the panel edge

Circular holes
Cut up to 152mm diameter

Sloped panels
And notched cut-outs available

Finishing with CustomClad

- Flashings fitted around apertures and doorways with a mitred or notched finish
- Standard flashing length up to 3000mm, with flexibility on longer lengths
- 0.5mm and 0.7mm flashings supplied with safety edges
- Plain galvanised steel or powder coated finishes available

Lead times

We aim for a 2-week lead time on CustomClad orders. Timings will depend on the detail and complexity of your project. Please contact us for an accurate lead time.

Support that keeps things moving

CustomClad is about more than cutting panels. It's about making installation easier, reducing risk, and helping you deliver on time.

Speak to our team about your project. We're here to help you find the right fit.

System Details

Vertical joint detail

FS-I-V-001A

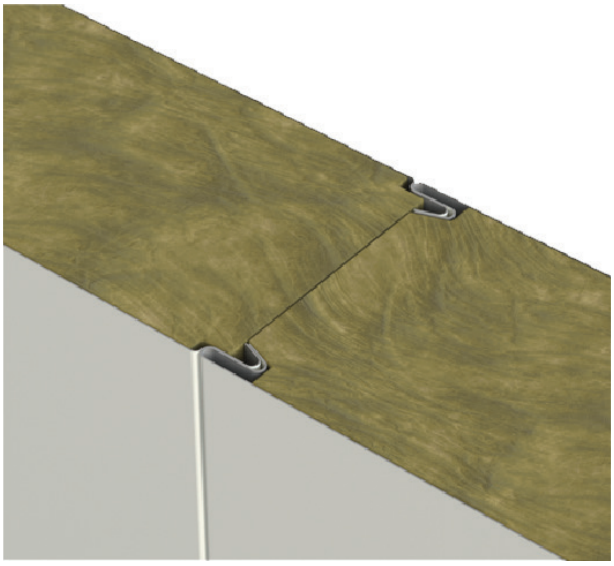

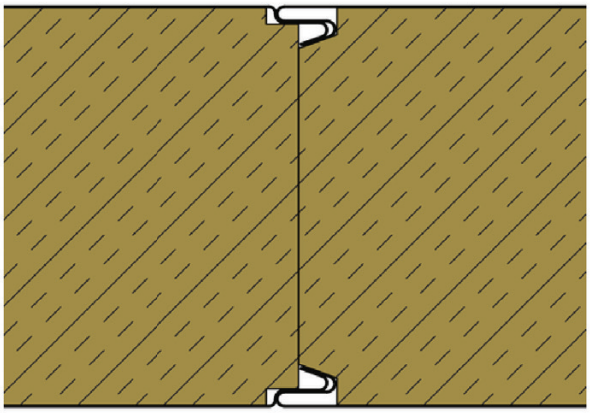

Vertical base detail

FS-I-V-003A

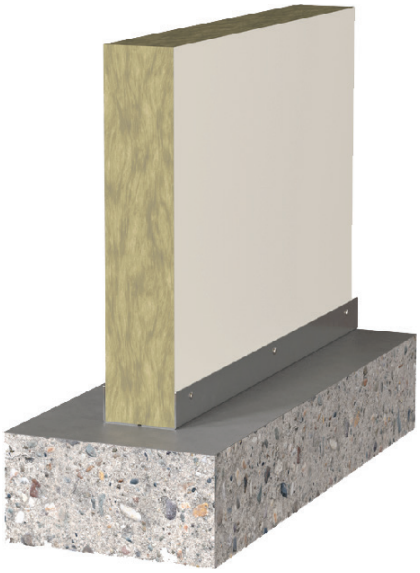

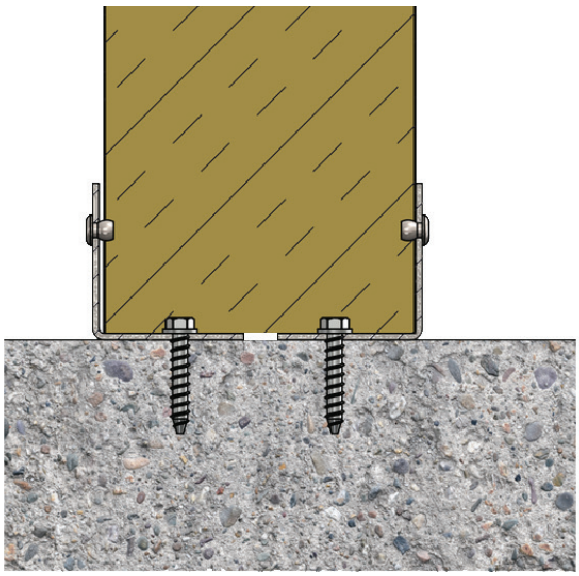

System Details

Vertical head detail

FS-I-V-002A

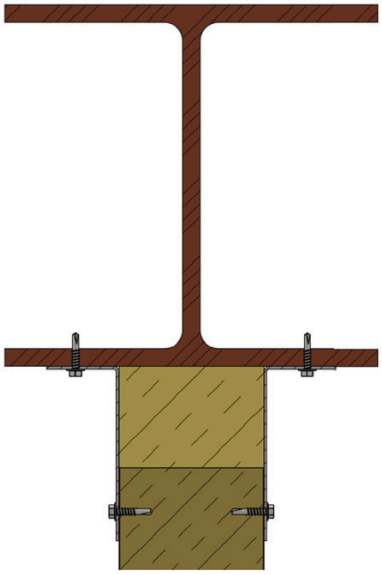

Wall / ceiling junction

FS-I-V-008A

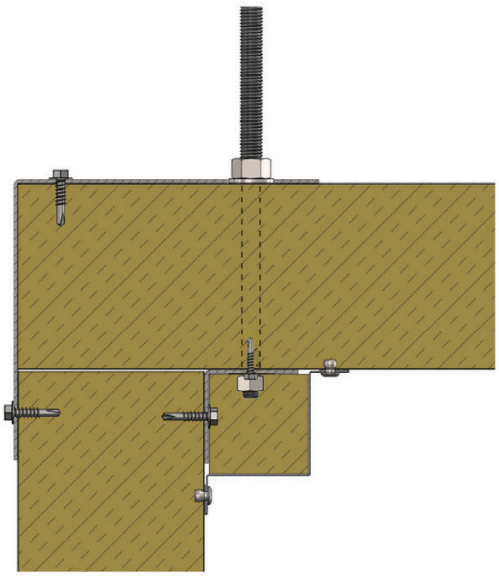

System Details

Horizontal panel vertical joint detail

FS-I-H-008A

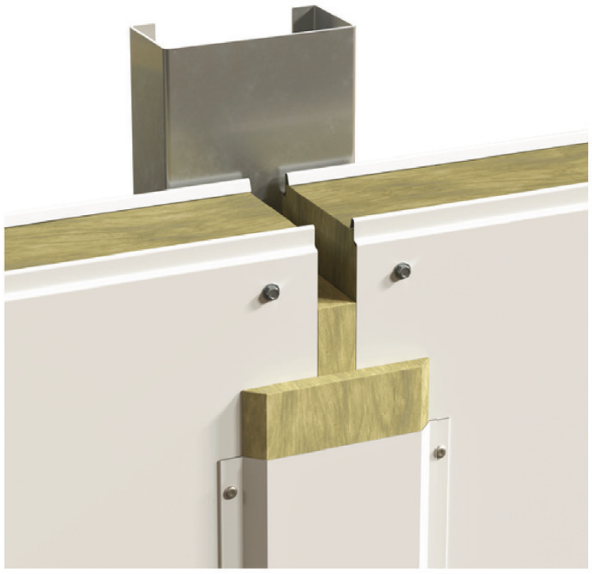

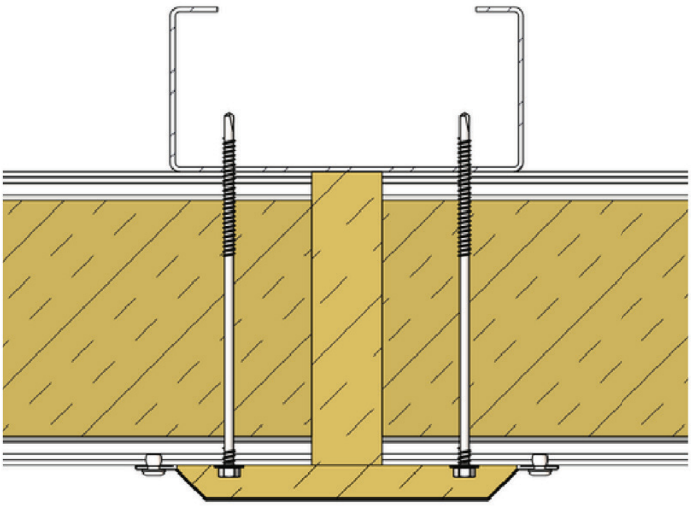

Horizontal base detail

FS-I-H-003A

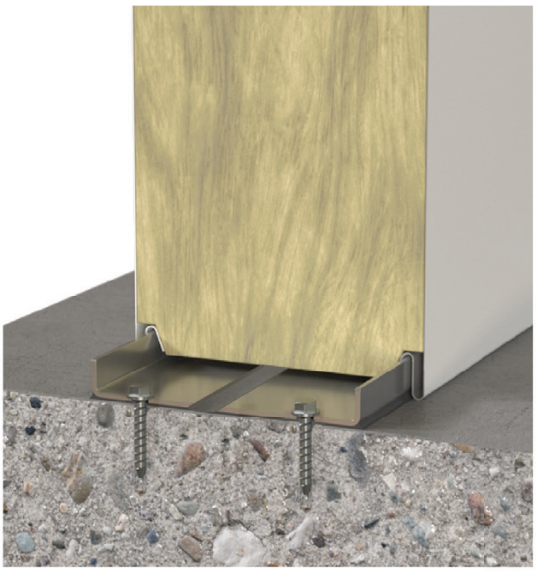

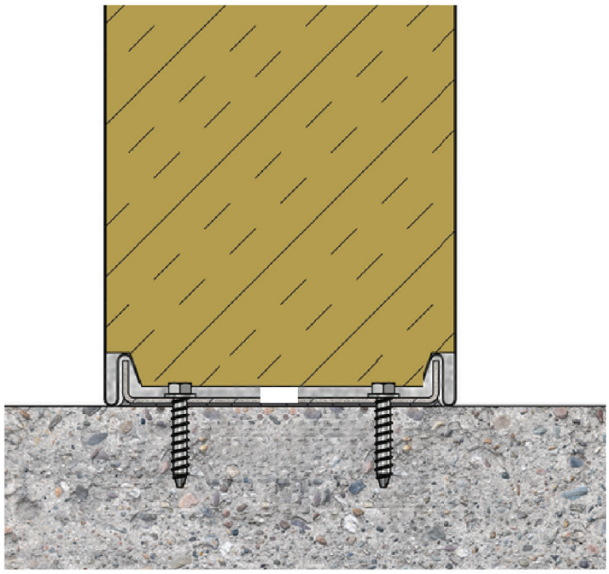

System Details

Horizontal head detail

FS-I-H-002A

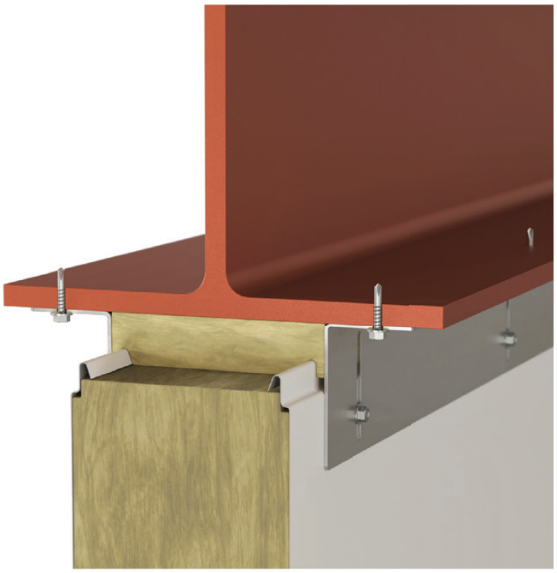

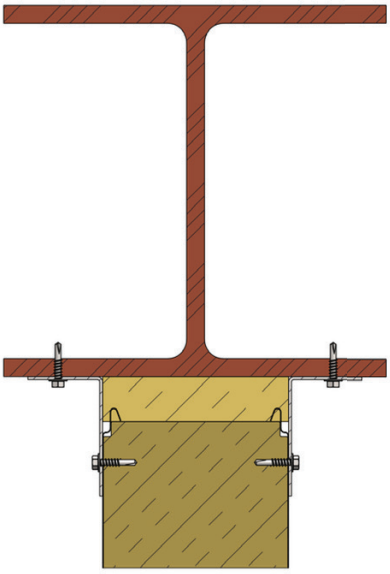

Horizontal corner detail

FS-I-H-004A

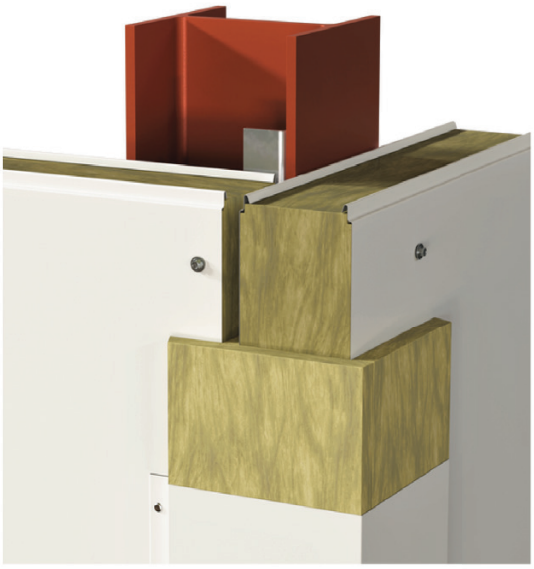

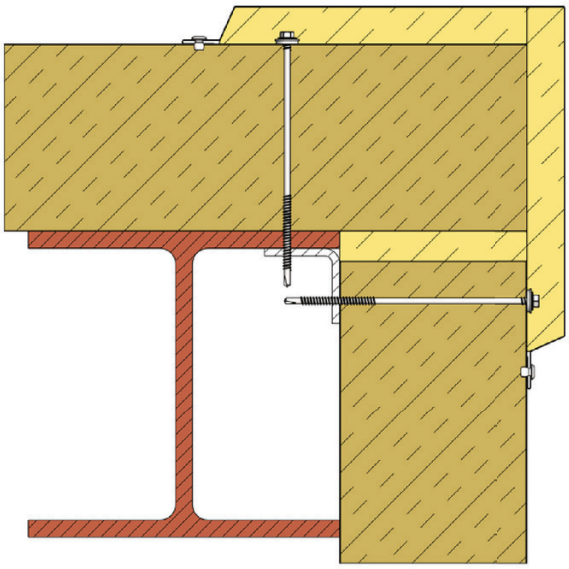

System Details

Ceiling joint detail

FS-I-C-001A

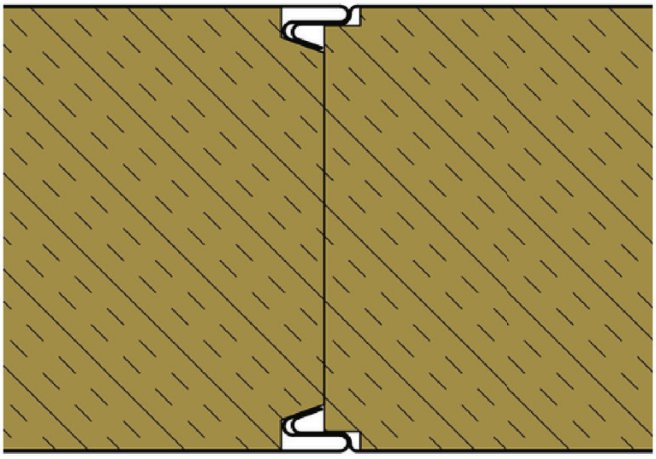

Ceiling top hat detail

FS-I-C-005A

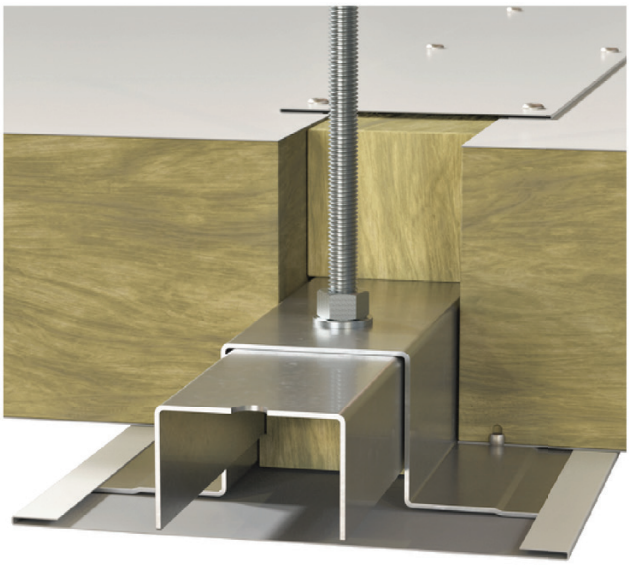

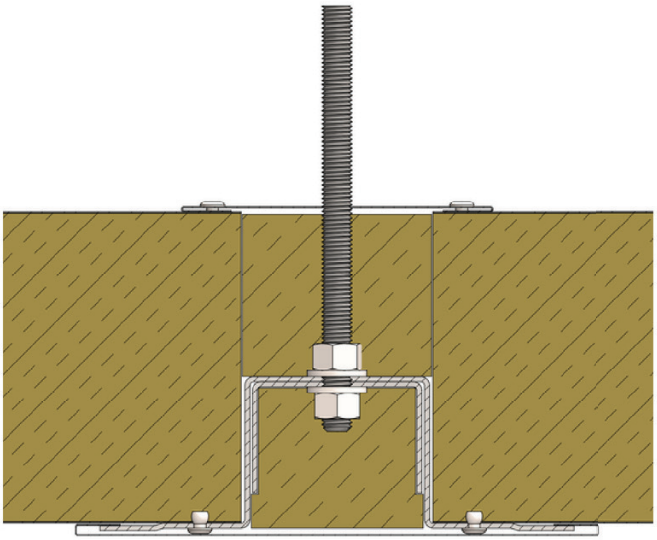

Ceiling top hat detail is supplied by others.

ISO CLAD
The panel of choice

Get in touch with us

Our team is here to help with everything from product selection to technical support. Whether you're planning a new build or upgrading existing facilities, we'll make sure you get the right panel solution for your project.

Talk to our team

0191 258 5052

sales@isoclad.co.uk

Scan the QR code for datasheets, certifications and more resources.

Head Office, Isoclad Ltd, 10 Alder Road, West Chirton North Industrial Estate, North Shields, NE29 8SD, United Kingdom.